Presentation of two design studies in the framework of the Cherenkov Telescope Array (CTA)

Arno Gadola on behalf of CTA Zürich
Physik-Institut Universität Zürich
SPS ÖPG annual meeting Innsbruck 03. Sept. 2009

Outline

- **Introduction**
  - CTA
- **Topic 1: Active Mirror Control (AMC)**
  - The actuator
  - 'Our' design (schematic drawing)
  - Tests and performance
- **Topic 2: Light guides**
  - Open vs. solid light guides
  - Simulations
  - Production

Introduction: CTA

The **C**herenkov **T**elescope **A**rray (CTA) project (baseline design)

- Detection of γ-rays with energies of O(10) GeV to >100 TeV
- Array of about 70 to 100 Cherenkov telescopes of 6, 12 and 24 m dish diameter
- Tessellated reflector (hexagon mirror segments of about 1.2m^2)
- Field of view of 8° (for Ø12m)
- Focal length / diameter = 1 – 1.5 (Ø12m)
- Foreseen factor of 5-10 improvement in sensitivity and extension of accessible energy range compared to current IACTs

- www.cta-observatory.org

MAGIC I, La Palma

Active **M**irror **C**ontrol

Actuators are used for:

- Compensation of dish deformations
- Refocusing of mirrors

Mechanics:

- Mirror mounted to the dish structure by three point gimbal (1 fixed, 2 equipped with actuators)
- 2 actuators per mirror ⇨ 190 actuators for a 12 m telescope

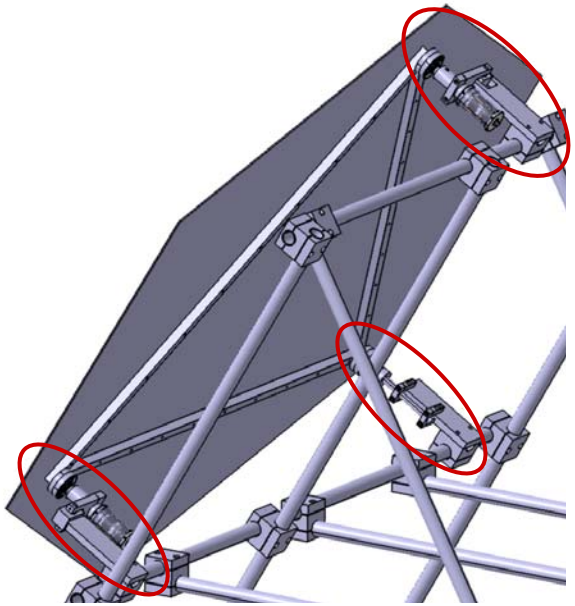

Requirements:

- Cheap
- Reliable
- Marginal power consumption
- Light-weighted

⇨ **First approach leads to redesign of MAGIC actuator**

Active **M**irror **C**ontrol

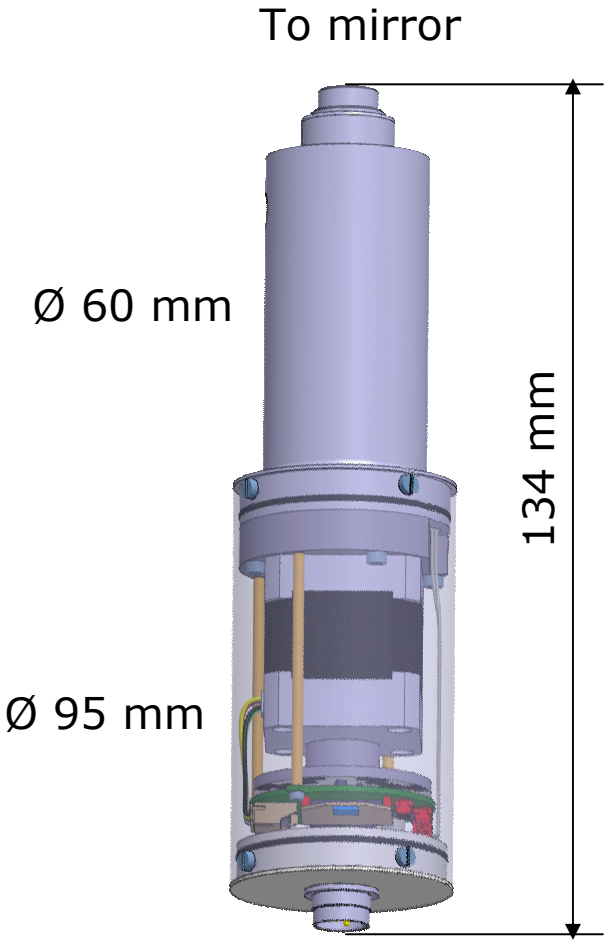

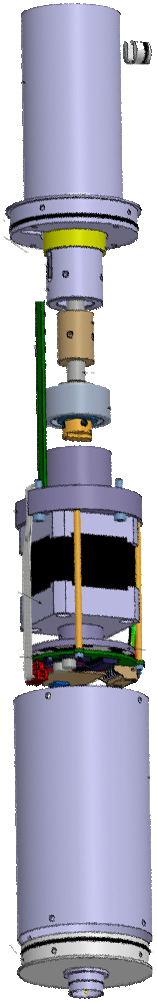

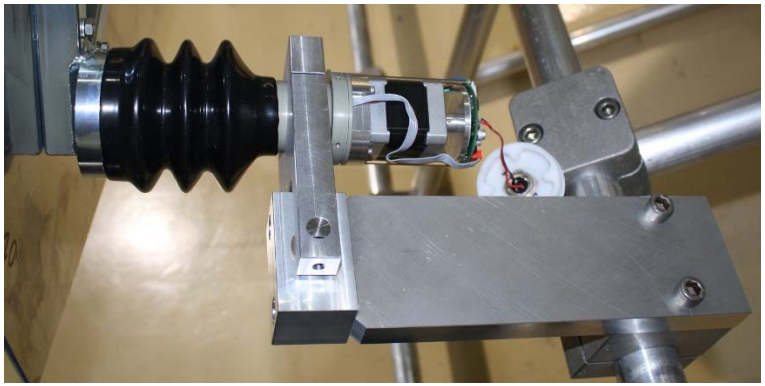

Active **M**irror **C**ontrol

- Electrical specifications
  - Electric power: 0.9 W (standby), 8.1 W (driving) at 18 V
  - Position encoding: Hall-sensor and Gray-code, absolute

- Mechanical specifications
  - Weight: < 1 kg
  - Dimensions: 60/95x134 (diam. x length)
  - IP 67: dust tight, waterproof
  - Maximal load: 20 kg
  - Total stroke range: 37 mm
  - Positioning accuracy: 30 µm
  - Elevation speed 0.5 mm/s
  - Arbor: self-blocking
  - 1 arbor turn = 1 mm elevation

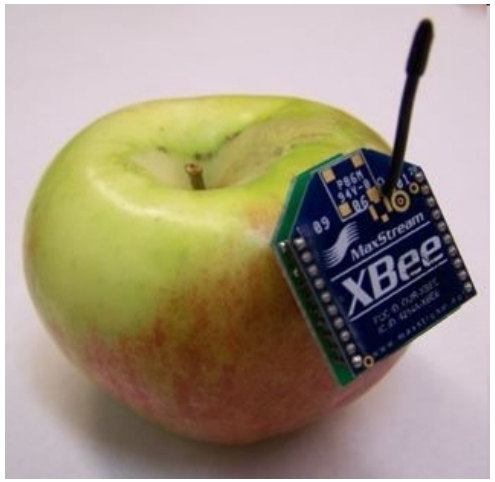

- Communication
  - IEEE 802.15.04 standard (W-LAN), Network with up to 2^{16} nodes, broadcast and individual actuator access

Active **M**irror **C**ontrol

Performance of long-term outdoor test:

- Running under real weather conditions (rooftop of institute)
- Actuator load: Static load ~40 N (0 km/h)
  Dynamic load ~200N (60 km/h)
- Goal: 400'000 cycles (10 years) of ±3 mm strokes

⇨ **400'000 cycles = 10 years of operation already completed**

Outlook:

- Analysis of the installed actuator mechanics (abrasion, mechanical tolerance etc.)
- Long-term tests with other materials for arbor and threaded bush
- Testing of the wireless communication under real conditions (large number of nodes, metal structure environment)

Light guides

Several needs for a light guide system in front of the camera's photo sensors:

- Enlarge the sensitive area
- Filling possible dead space between sensors
- Shield the sensors from stray light with large incidence angle

Question: open (hollow) or solid light guides?

Light guides

Parameters:

- Wall shape:
  - Flat (soft cutoff)
  - Parabola (soft cutoff)
  - **Tilted parabola**
    (sharp cutoff)
- Length: sharpens cutoff
- In- and output aperture

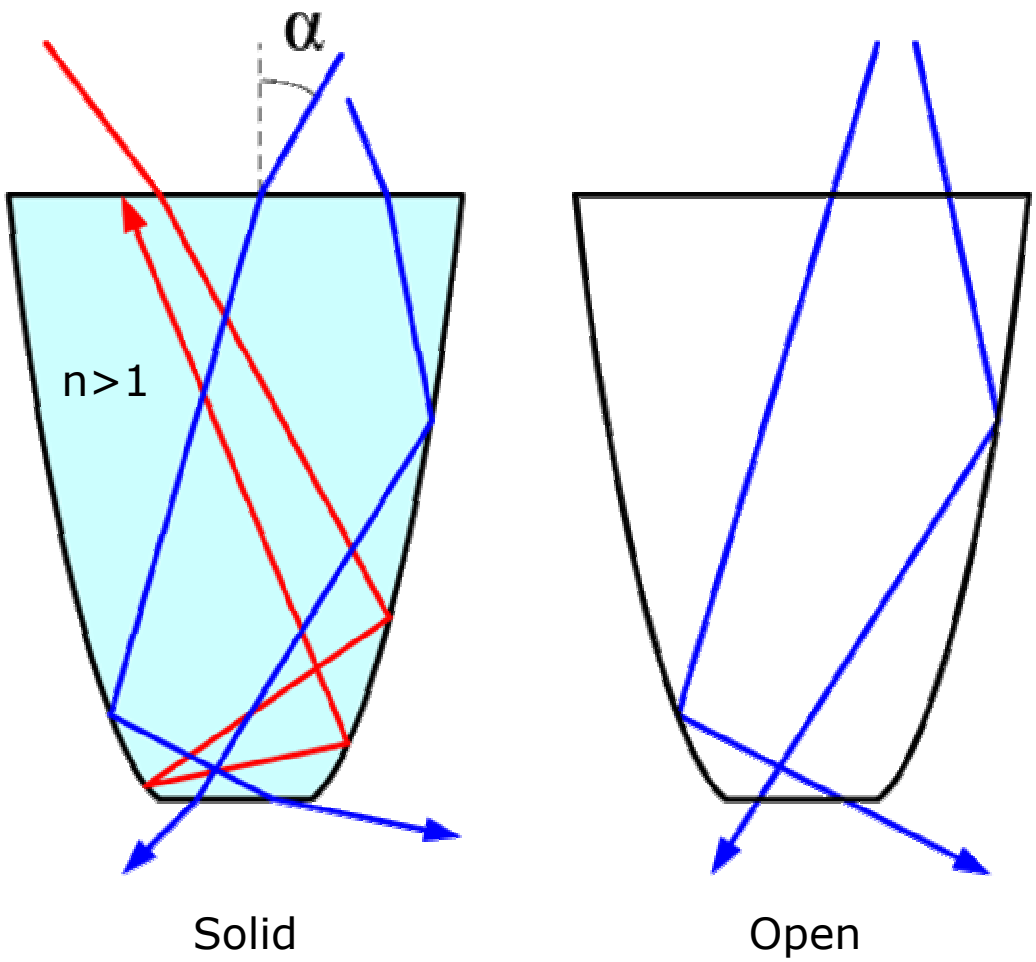

Light guides

	Open	Solid
Material	UV-reflective dielectric foil	Dielectric medium
Production	Folded	Moulded, extruded
Light guidance	Reflection	Total reflection
Aperture shape	Circular Square-shaped Hexagon	All shapes possible (In: hexagon -> Out: square)
Wall shape	Parabolic	Parabolic or any other form
Pros	Cheap Light-weighted No optical coupling to sensor necessary	Shape Fill factor Mass production Handling Assembling
Cons	Possible shapes restricted Production (folding process needs to be done by hand)	Loss of light through reflection Expensive Difficult production Optical coupling to photo sensor Optical cross-talk

Light guides

Comparison of open and solid light guides

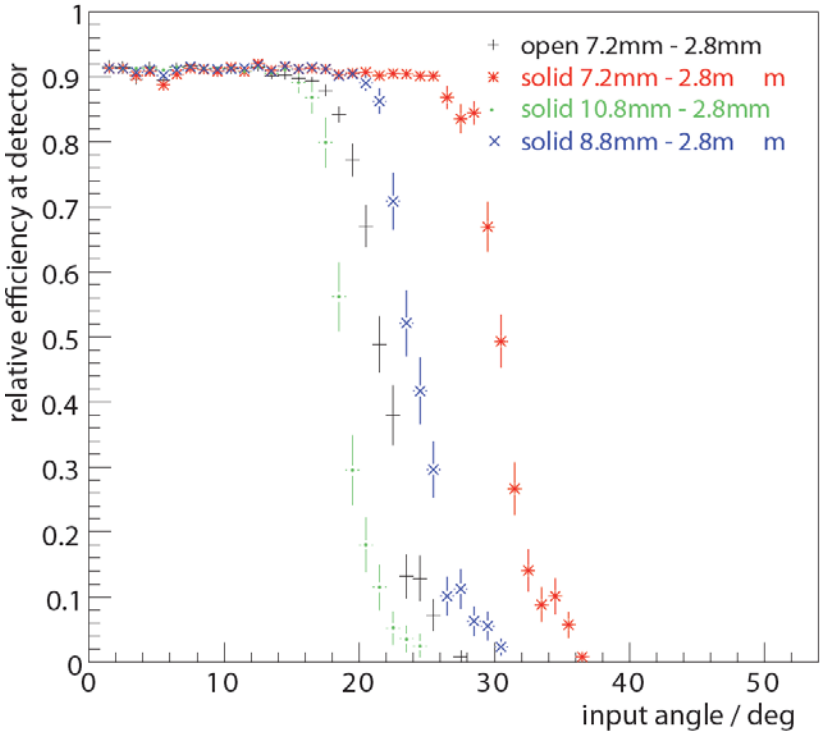

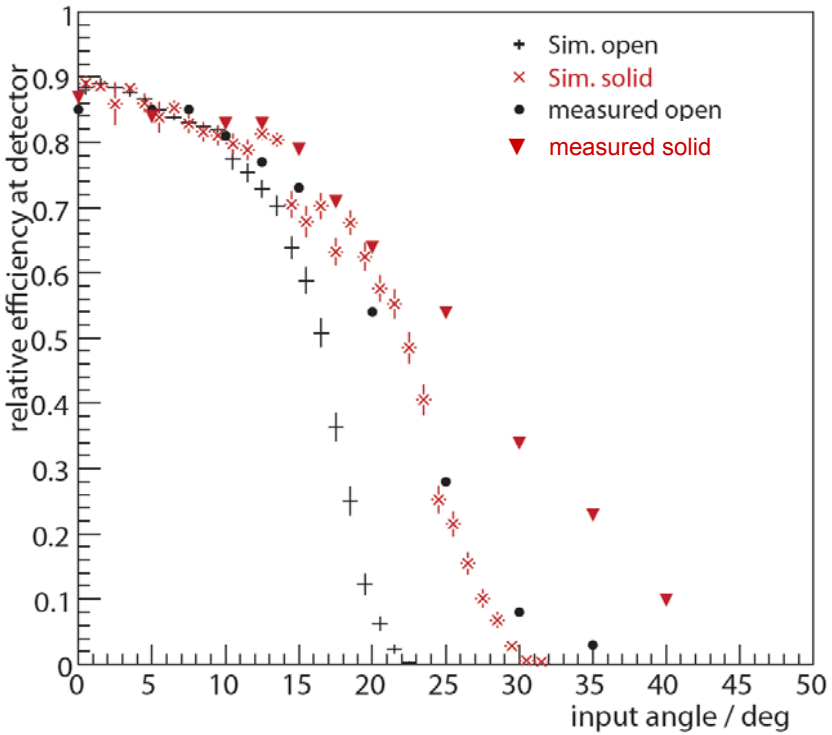

Simulations by Isabel Braun

Input area: ○
Output area: ○
Length: 20 mm

Input area: □ 7.2x7.2 mm²
Output area: □ 2.8x2.8mm²
Length: open cone 20 mm, solid 25 mm

Light guides

Ongoing works and outlook

- Further simulations for optimisation of light collection by Isabel Braun (ETHZ)
- Start production of single solid cones for investigation of:
  - Impact of surface roughness
  - Understanding production process and problems
  - Test of reliability of production process